KINGFISHER (LUBRICATION) LIMITED

136 MERRIWOOD ROAD
LEEDS LS7 2BT
ENGLAND

TEL. +44 (0)113 209 6969
FAX. +44 (0)113 237 4027
email. [illegible]
web. http://www.kingfisherlub.co.uk

AMENDMENTS

DATE	AMENDMENT
24/05/99	MATERIAL SPEC AND DRAWING NO. ADDED
6/12/99	TIME TO RED RUST WAS RE-ADDED
12/04/00	MATERIAL SPEC WAS TO BS 970

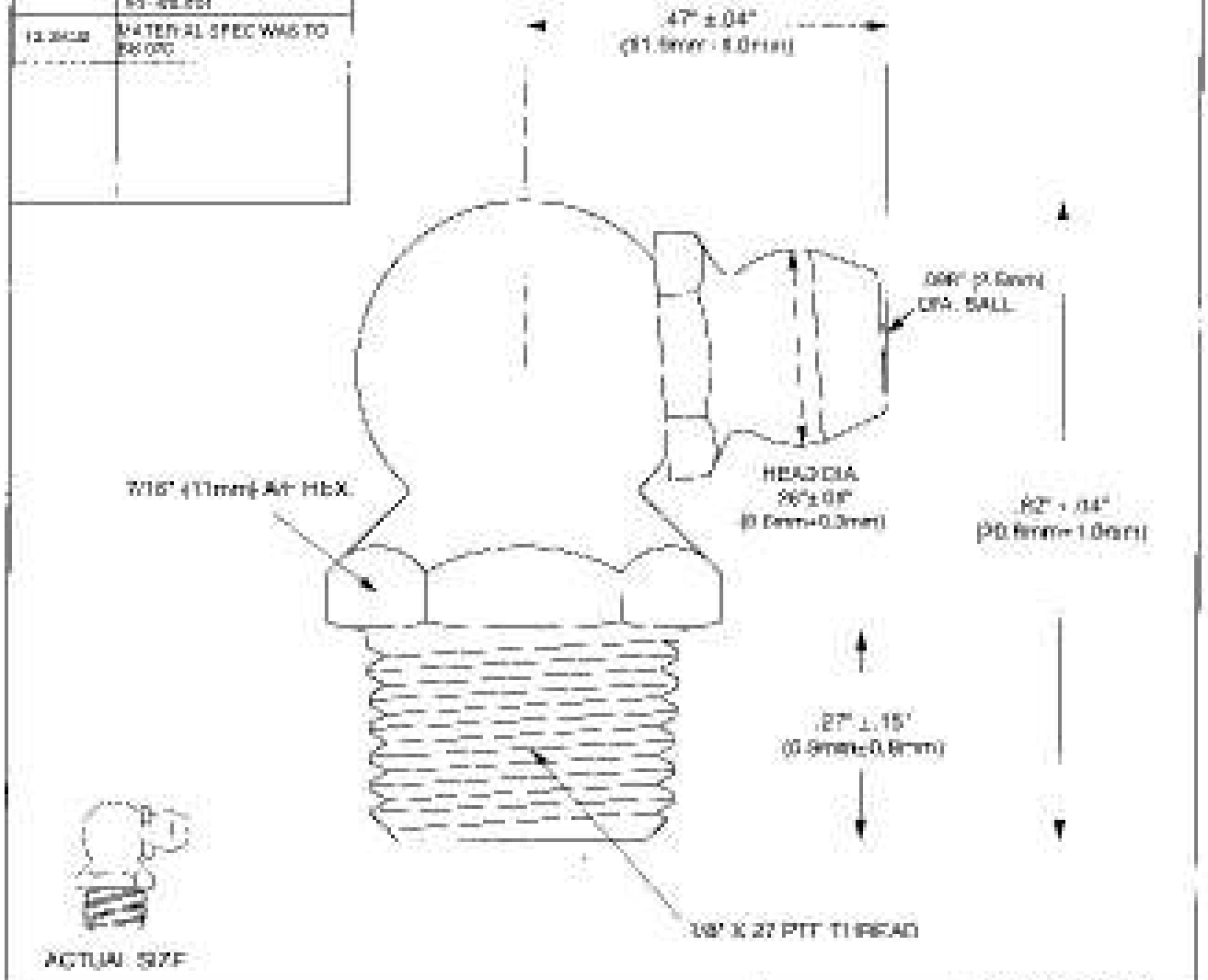

MATERIALS:

BODY: MILD STEEL - 11SMn30 FREE CUTTING (BS EN 10277-3) (AISI 12L14)

HEAD: MILD STEEL - 11SMnPb30 FREE CUTTING (BS EN 10277-3) (AISI 12L14)
CARBO-NITRIDED CASE HARDENED
(.006" - .008" (0.15 ROCKWELL 15N MIN.
BOSH. 450 VICKERS HV1)

PLATING: ZINC PLATED, YELLOW CHROMATION
(72 HOURS TO RED RUST MIN. ASTM B117)

SPRING: STEEL - HS3 (BS5216) STRESS RELIEVED
(AISI 1094/1095)

BALL: CARBON STEEL - AISI 1015/1018 (BS970 - BS 970)

CODE NUMBER:	211613
DRAWING No:	211613 / 1A
DESCRIPTION: 1/8" x 27 PTF 90° ANGLE HYDRAULIC GREASE FITTING	
DRAWN BY & DATE: R.H. 12.01.99	CHECKED BY & DATE: A.G.B. 26.11.99
CAD DRAWING SCALE	5:1
ISSUE DATE:	